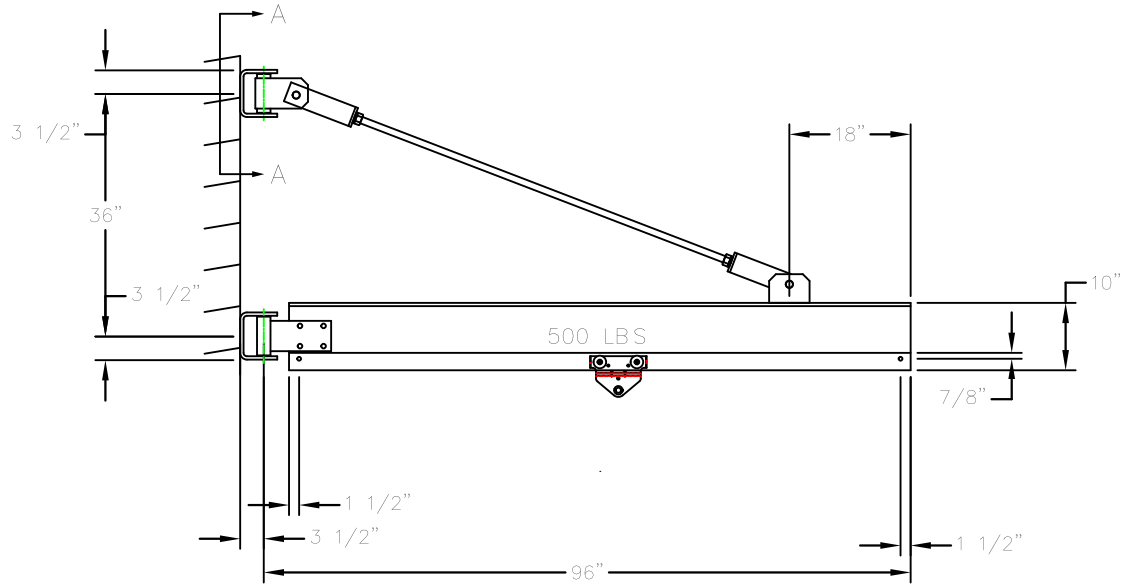

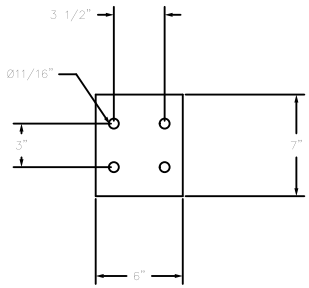

DETAIL A–A (TYP)

SUGGESTED MAINTENANCE:

1. RENEW GREASE IN UPPER AND LOWER PIVOT ASSEMBLIES EVERY (6) MONTHS WITH LUBRIPLATE #630–AA OR EQUIV.
2. CHECK LEVEL OF BOOM AND TIGHTEN HARDWARE EVERY (3) MONTHS.
3. PERFORM A GENERAL INSPECTION EVERY (6) MONTHS. (REFER TO MAINTENANCE MANUAL FOR INSTRUCTIONS)

CONFIDENTIAL

CREATED BY: HOOSIER CRANE SERVICE

GORBEL

600 FISHERS RUN
P.O. BOX 593
FISHERS, NY 14453-0593

MODEL NO:	AL100–G1–500–8
CAPACITY:	500 LBS
SPAN:	8'
QUANTITY:	1
SHIPPING WT.:	174.76 LBS
THRUST & PULL:	1.8 Kips
DRAWN: JONHAR	DATE: 3/19/2015
C.O.#: lauyod00318	P/N: lauyod00318.0A