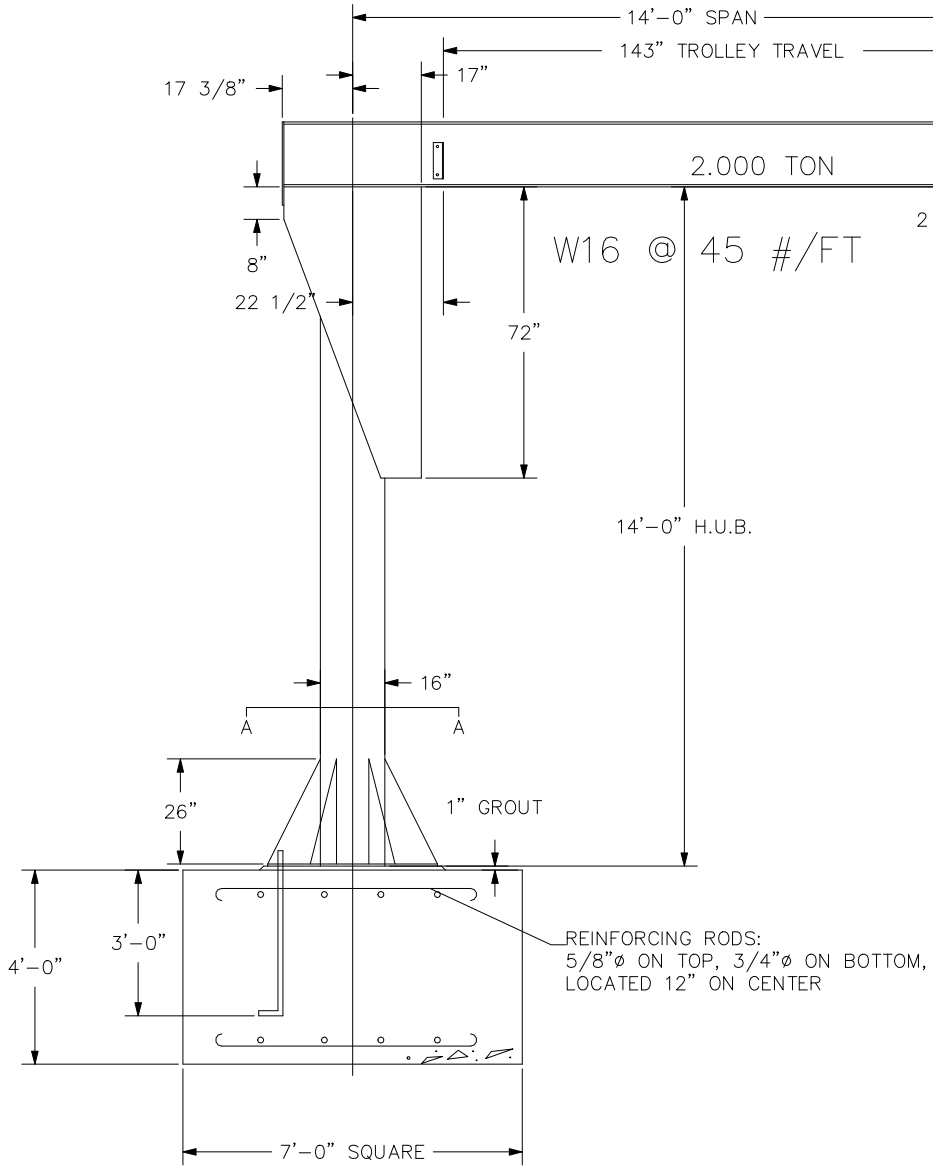

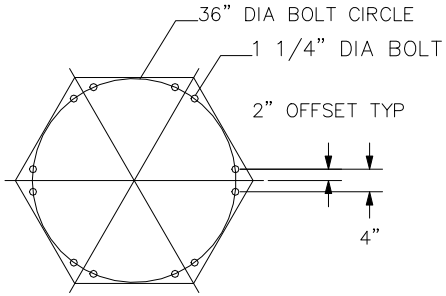

12 BOLT
BASE BOLT PATTERN
1 1/4" BASE PLATE THICKNESS AT ANCHOR BOLT
VIEW A-A
NOT TO SCALE

NOTES:
1) JIB CRANE FOUNDATION REQUIREMENTS ARE BASED ON A SOIL PRESSURE OF 2500 LBS PER SQUARE FOOT. CONCRETE RECOMMENDED FOR JIB CRANE FOUNDATION IS 3000 LBS PER SQUARE INCH OF COMPRESSIVE FORCE.
2) DO NOT SCALE FROM THIS DRAWING.
3) OVERALL HEIGHT = 15'-4 1/8"

CREATED BY: HOOSIER CRANE SERVICE

CONFIDENTIAL

GORBEL
600 FISHERS RUN
P.O. BOX 593
FISHERS, NY 14453-0593

MODEL NO.: FS300-16-W16

CAPACITY: 2.000 TON
SPAN: 14'-0"
H.U.B.: 14'-0"
QUANTITY: 1
SHIPPING WT.: 2763 LBS

DRAWN: lauyod	DATE: DEC 26, 2014
C.O.#: test	P/N: test.1A